Caster mounting instructions

FIG. A

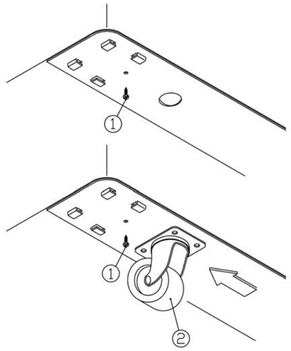

FIG. B

Procedure:
- Lift the freezer to suitable height (or lean it slightly up to 45º at the most).

- Draw out screw (1) (fig. A).

- Insert the caster (2) in the direction of the arrow and draw in screw (1) (fig. B).

NOTE:
In case of hard caster inserting, force it slightly with a hammer in the direction of the arrow.

Technical Support

www.mimet.cl

Phone assistance:
(864) 597 1944

service@mimetusa.com

USA
242 Franklin Street
Spartanburg, SC 29303

Contact Information

www.mimet.cl

Phone: (56-2) 380 9500
Fax: (56-2) 551 1496

mimet@mimet.cl

CHILE
Av. Carlos Valdovinos 590
San Joaquín - Santiago
Casilla 432, Correo 3

Remember; if you need further assistance regarding the operation of your Mimet unit, contact us directly prior to consulting other sources.

"Nobody knows the MIMET units, better than MIMET"

Important: When requesting technical support, please provide the model and serial number of your unit.

OPERATING AND INSTALLATION MANUAL

Horizontal Freezers

Series CV-N / CF-N
100/ 170/ 200/ 330/ 350/ 430/ 580

Horizontal Coolers

Series BV-N
220

C-1103144S V02

Before installing your cooler, read these instructions carefully.

Introduction

- *You have received a durable and quality unit. To maximize the usage of your unit, follow the instructions. If you have any questions contact your supplier for additional information.*

Installation

- *Place the unit in a dry and properly ventilated area. Do not block the grills.*
- *To minimize noise and vibration, locate the unit on a leveled floor.*
- *Locate the unit away from heat sources, flammable products and direct sunlight.*
- *Do not locate the unit close to walls, to allow air circulation required by the compressor. Keep a distance from wall of 4" at least.*

Electric Connection

- *Once the equipment is installed in its final location, wait at least one hour prior to plugging the unit to the electric outlet.*
- *These units are designed to operate under one of the following electrical power: **115V~60Hz, 220V~50Hz o 220V~60Hz**. Check the electrical characteristics for each unit and the outlet voltage rating prior to plugging the unit.*
- *All units are supplied with 10 ft of electric cord. Never use an extension cord.*
- *For your safety and protection of the unit, insure that the electrical circuit offers the proper ground circuit. Contact a certified electrician for any electrical changes.*
- ***WARNING:***
  Do not connect the unit to a female plug or share plugs with other appliances.
  Each unit must have a dedicated electrical outlet.
  If the electrical cord is damaged, insure that it is replaced by a plug with identical electrical characteristics.

Start

- *Once the unit is plugged into the electrical outlet and prior to being loaded with product, it is important to let the unit run for at least one hour. This should also apply when the unit is being cleaned or serviced.*
- *Adjust the thermostat considering "1" is the minimum temperature and "7" corresponds to the maximum temperature. "O" indicates the off position. We recommend setting the unit at "5" (see fig. 1).*
- *If you would like to turn on the light, push the light switch which is located behind display (see fig. 1).*
- *Do not load the cabinet with warm products, wait until the product reaches the required temperature.*
- *If a power failure occurres, avoid opening the glass lids.*

Maintenance

- ***WARNING**: Prior to implementing the following operations, unplug the unit from the outlet.*
- *Clean the inside cabinet with a clean damp cloth using neutral soap. Do not use abrasive or flammable cleaning products to avoid damage to the metal finish.*
- *In case of excessive frost inside, about 2cm of thickness, defrost the unit unplugging it from the outlet.*
- *If the unit will not be operated for a long period of time, we suggest unplugging the unit from its electrical outlet, following the cleaning instructions described above, prior to storing the unit.*
- *To restart the unit, see the Start instructions*
- *To replace the fluorescent tube, remove the lamp cover, remove the tube form the lamp socket, install the replacement tube and the lamp cover.*
- *When the cabinet has reach its end of life cycle, the foamed cabinet should be handled by an approved recycling company specializing in handling this type of units.*

In case the unit shows operating problems, check the following prior to calling the authorized service company:

SYMPTOMS	POSSIBLE CAUSE	SOLUTION
The unit is not operating	Faulty electrical contact	Verify electrical connections
	Poor electrical power	Check the power connection and electrical outlet
	Thermostat setting "0"	Change the thermostat setting to a higher number
Not reaching desired temperature	Unit is exposed to direct sun light	Relocate the unit to a shaded area
	Thermostat is not propertly adjusted	Adjust the thermostat setting to a higher number
	Blocked grills	Clean the grills of any debris collected
	Glass lids not properly closed	Check the glass lids closing
	Excessive frost inside	Refer to Maintenance instructions
Abnormal noises	The unit is not properly level	Locate the unit on a leveled floor
	Friction with other objects	Move the unit and avoid contact with other objects

Warranty and Service

- *Warranty is valid for one year from the date of purchase.*
- *The warranty covers defective parts and workmanship. The following items are not covered under warranty:*
  1. *Loss of products.*
  2. *Damages caused by transportation.*
  3. *Damages caused by modifications made by unauthorized individuals.*
  4. *Fluorescent lights, glass parts or plastic component parts.*
  5. *Worn out plugs or defective electrical components.*
  6. *Maintenance of the unit.*
- *Warranty is valid showing the purchase receipt.*
- *We offer a professional service network which offers the necessary technical support for your unit.*
- ***See contact information in the back of the Manual.***
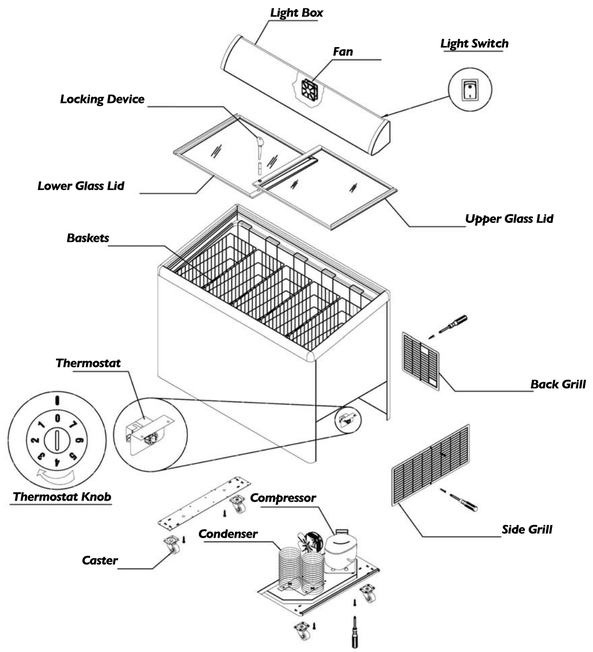
FIG. 1 Freezer Parts